| REV. | ECN NO. | LOCTIONS. | DESCRIPTION | DATE | CHANGER |
|---|---|---|---|---|---|
| | | | | | |

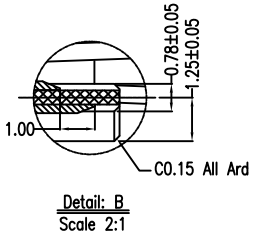


Detail: B
Scale 2:1

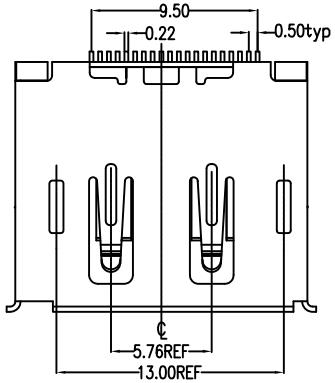


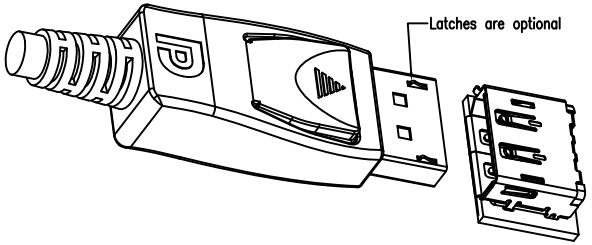


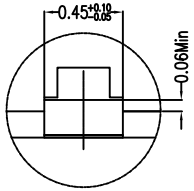


Detail: C
Scale 10:1

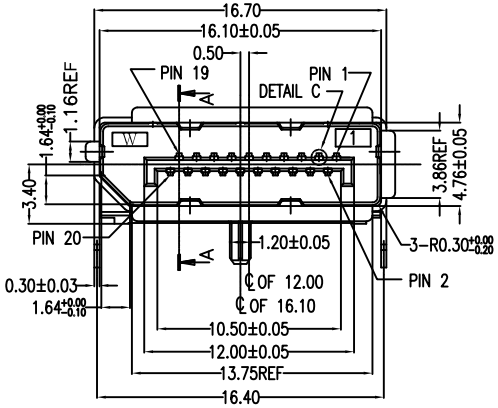


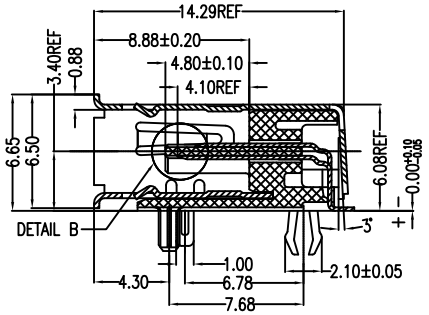


SECT A-A

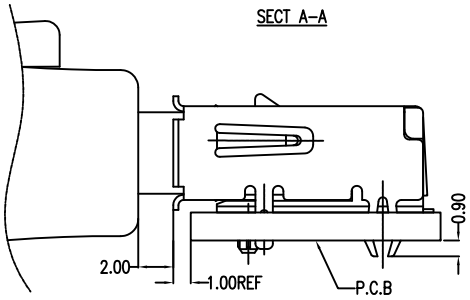


Fully mated condition

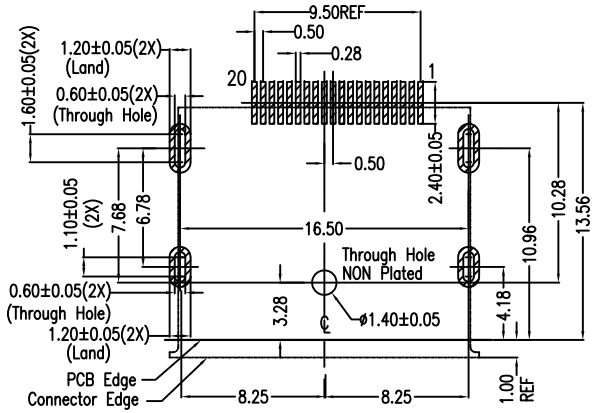


P.C.B Layout(T=1.60mm)
COMPONENT SIDE

| No. | Signal Type | No. | Signal Type |
|---|---|---|---|
| 1 | In | 11 | GND |
| 2 | GND | 12 | In |
| 3 | In | 13 | CONFIG(see note 1) |
| 4 | In | 14 | CONFIG(see note 1) |
| 5 | GND | 15 | I/O |
| 6 | In | 16 | GND |
| 7 | In | 17 | I/O |
| 8 | GND | 18 | Out |
| 9 | In | 19 | RTN |
| 10 | In | 20 | Power Out(see note 2) |

## NOTES:

1. Material:
   Housing: LCP+50%G.F, UL94V-0 Rated.
   Color: Black.
   Contact: Phosphor Bronze.
   Plating: Gold Plating over Nickel on Contact Area.
   Tin Plating on Solder Tail.
   Shell: Brass.
   Plating: Nickel Plating.

2. Mechanical:
   Insertion Force: 4.5Kgf Max.
   Withdrawal Force: 1.0~4.0Kgf.

3. Electrical Specification:
   Operation Voltage: 40VAC Max.
   Current Rating: 0.5 Ampere per Contact.
   Contact Resistance: 30mΩ Max.
   Insulation Resistance: 100MΩ Min.
   Dielectric Withstanding Voltage: 500V AC Min.

4. Environmental:
   Operating Temperature: -20°C to +85°C

## Part Number:

TDP-R20RS40-E3

- DisplayPort Series
- R: Receptacle Type
- 20: 20Pins
- R: RIght Angle
- Product Number:
  - E3: Without Flange
  - 0: Black Color
  - 4: 30u" Plating
  - S: SMT Type

| GENERAL TOLERANCE | |
|---|---|
| X.± | X.°± 3° |
| .X± 0.38 | .X°± |
| .XX± 0.25 | .XX°± |
| .XXX± 0.20 | .XXX°± |

鋐創科技有限公司
TRONTEK TECHNOLOGY CO.,LTD.

TITLE: DisplayPort Connector 20P, Receptacle SMT Type, Without Flange

CUSTOMER DRAWING

PART NO. TDP-R20RS40-E3

DWG NO. 20120714

| APPROVED | CHECKED: | DRAWN: | UNIT | SCALE: | SHEET: |
|---|---|---|---|---|---|
| Tony | Jason | frank | mm | 1:1 | 1/1 |

PROJ. REV. A