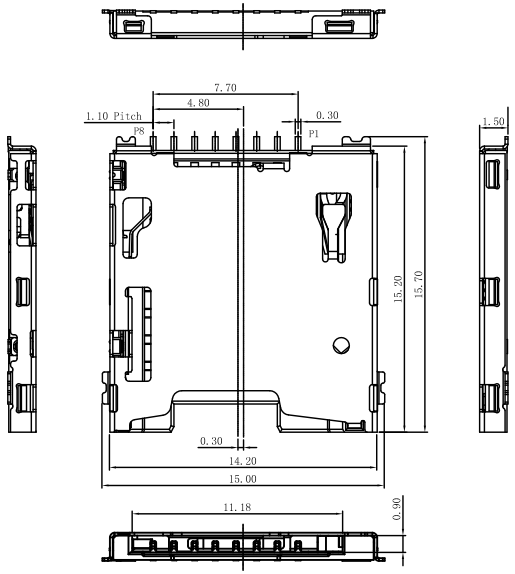

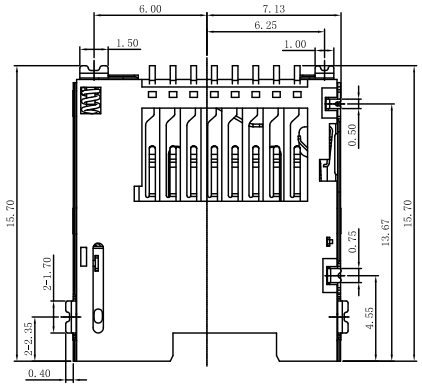

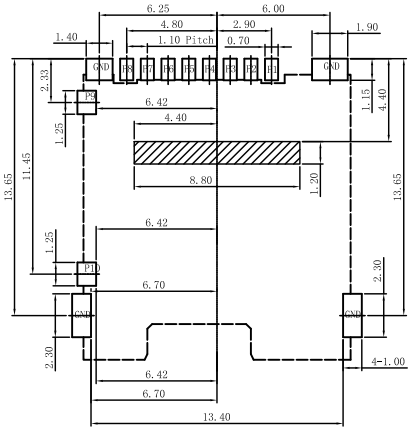

RECOMMEENDER PCB LAYOUT

TOLERANCE UNLESS OTHERWISE IS ±0.05

:PROHIBITION AREA

PIN NO.	discription
Pin 1	DAT2: Data line
Pin 2	CD/DAT3: card Detect/Data line
Pin 3	CMD: command/Response
Pin 4	VDD: Supply voltage
Pin 5	CLK: Clock
Pin 6	VSS: Supply voltage ground
Pin 7	DAT0: Data line
Pin 8	DAT1: Data line
Pin 9	DETECT SW(GND)
Pin 10	DETECT SW(CD)
GND	Cover GND

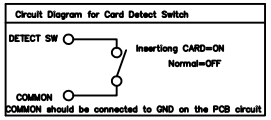

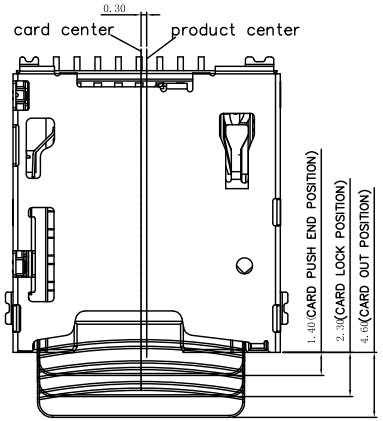

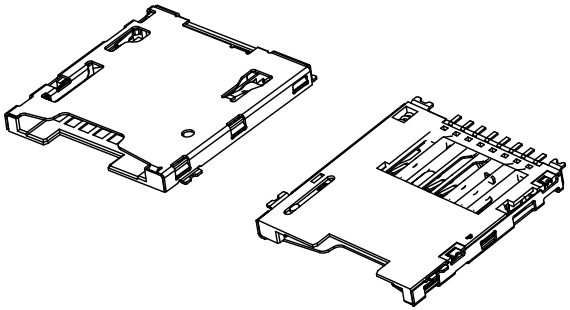

NOTES :

1. MATERIAL :
   - 1.1 HOUSING:LCP UL94 V-0, BLACK COLOR.
   - 1.2 SHELL: STAINLESS STEEL
   - 1.3 CONTACT: PHOSPHOR BRONZE
2. FINISH :
   - 2.1 CONTACT: GOLD PLATING ON CONTACT AREA, MATTE TIN 100u"MIN ON SOLDERTAIL AREA. 50u" MIN NICKEL PLATING OVERALL.
   - 2.2 SHELL: 30u" MIN NICKEL PLATING OVERALL. Au 1u"MIN ON SOLDERTAIL AREA.
3. EIECTRICAL CHARACTERISTICS:
   - 3.1 OPERATING VOLTAGE : 100V AC(rms)/DC.
   - 3.2 CURRENT RATING : 0.5 A.
   - 3.3 OPERATING TEMPERATURE: -25°C~+85°C.
   - 3.4 CONTACT RESISTANCE: 100 m OHMS MAX.
   - 3.5 INSULATION RESISTANCE: 1000M OHMS MIN. AT 250VDC.
   - 3.6 DIELECTRIC WITHSTANDING VOLTAGE:500 VAC/1MINUTE.

鋐創科技有限公司

TRONTEK TECHNOLOGY CO.,LTD.

TOLERANCE: X.X ±0.30, X.XX ±0.25, X.XXX ±0.15, X.° ±2°, X.X° ±0.5°	DRAWED BY : SANDY	DATE : 2018-4-16	PART NAME: TF PUSH 外焊1.5H 無柱
	CHECKED BY: DAVID	DATE : 2018-4-16	PART NO. TH68-TF08-150
UNIT: mm [inch]	APPROVED BY: TONY	DATE : 2014-4-16	MOLD NO. / DRAW NO:
SCALE:1:1 SIZE: A4			SHEET NO. 1OF1